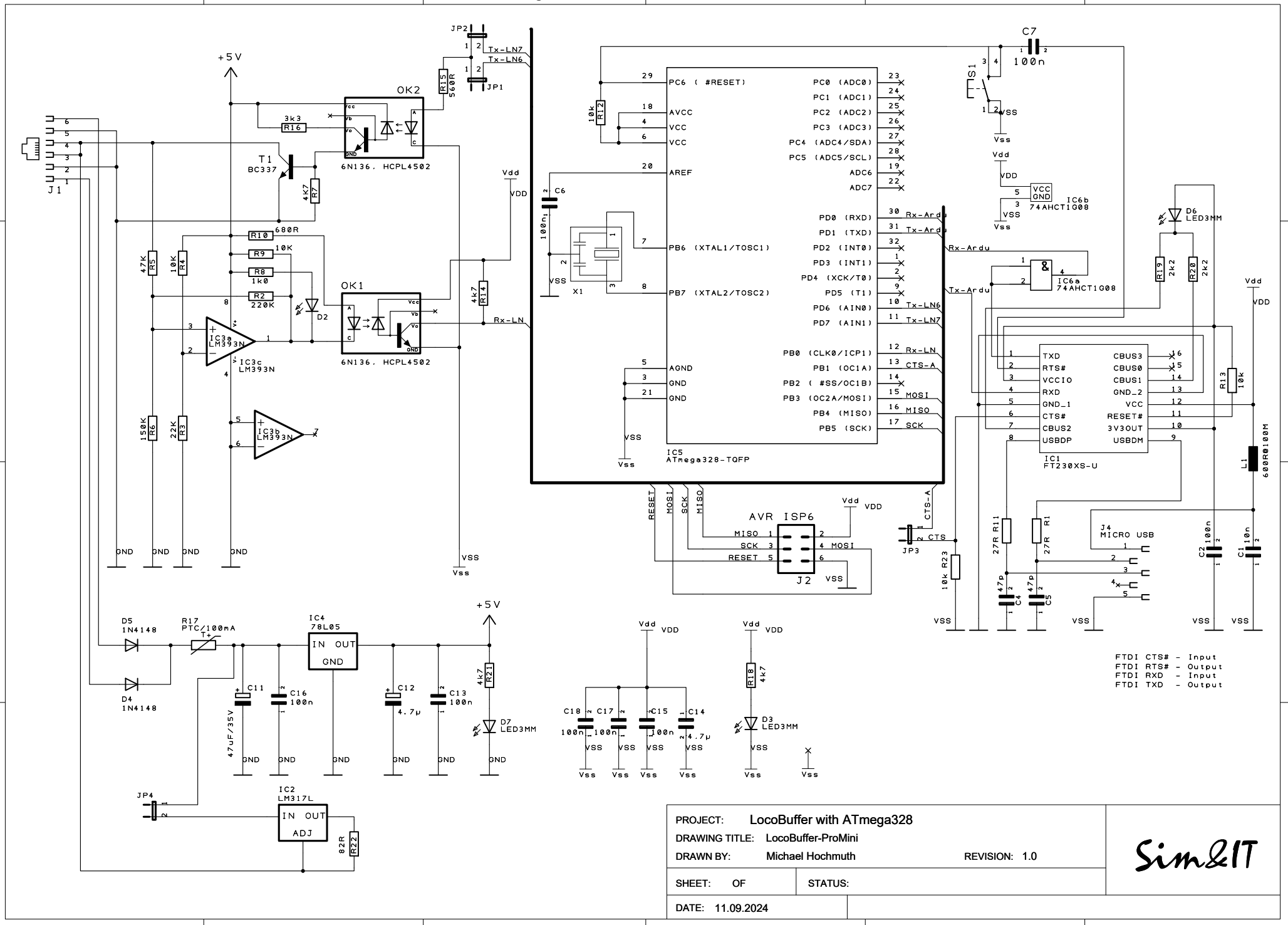
A
B
C
D
E
F
1
2
3
4
+5V
J1
OK2
6N136, HCPL4502
OK1
6N136, HCPL4502
T1
BC337
R16
3k3
R7
4k7
R15
560R
JP2
JP1
Tx-LN7
Tx-LN6
Rx-LN
Vdd
VDD
R10
680R
R9
10K
R8
1k0
R2
220K
D2
R5
47K
R4
10K
R6
150K
R3
22K
IC3a
LM393N
IC3c
LM393N
IC3b
LM393N
R14
4k7
GND
VSS
Vss
C7
100n
S1
IC6b
74AHCT1G08
IC6a
74AHCT1G08
R12
10k
C6
100n
X1
IC5
ATmega328-TQFP
PC6 (#RESET)
AVCC
VCC
AREF
PB6 (XTAL1/TOSC1)
PB7 (XTAL2/TOSC2)
AGND
PC0 (ADC0)
PC1 (ADC1)
PC2 (ADC2)
PC3 (ADC3)
PC4 (ADC4/SDA)
PC5 (ADC5/SCL)
ADC6
ADC7
PD0 (RXD)
PD1 (TXD)
PD2 (INT0)
PD3 (INT1)
PD4 (XCK/T0)
PD5 (T1)
PD6 (AIN0)
PD7 (AIN1)
PB0 (CLK0/ICP1)
PB1 (OC1A)
PB2 (#SS/OC1B)
PB3 (OC2A/MOSI)
PB4 (MISO)
PB5 (SCK)
Rx-Ardu
Tx-Ardu
CTS-A
MOSI
MISO
SCK
RESET
AVR ISP6
J2
JP3
CTS
R23
10k
IC1
FT230XS-U
TXD
RTS#
VCCIO
RXD
GND_1
CTS#
CBUS2
USBDP
CBUS3
CBUS0
CBUS1
GND_2
VCC
RESET#
3V3OUT
USBDM
D6
LED3MM
R19
2k2
R20
2k2
R13
10k
L1
600R@100M
R11
27R
R1
27R
C4
47p
C5
47p
J4
MICRO USB
C2
100n
C1
10n
FTDI CTS# - Input
FTDI RTS# - Output
FTDI RXD - Input
FTDI TXD - Output
D5
1N4148
D4
1N4148
R17
PTC/100mA
IC4
78L05
IN OUT
GND
C11
47uF/35V
C16
100n
C12
4.7µ
C13
100n
R21
4k7
D7
LED3MM
JP4
IC2
LM317L
IN OUT
ADJ
R22
82R
C18
100n
C17
100n
C15
100n
C14
4.7µ
R18
4k7
D3
LED3MM
PROJECT: LocoBuffer with ATmega328
DRAWING TITLE: LocoBuffer-ProMini
DRAWN BY: Michael Hochmuth
REVISION: 1.0
SHEET: OF
STATUS:
DATE: 11.09.2024
Sim&IT