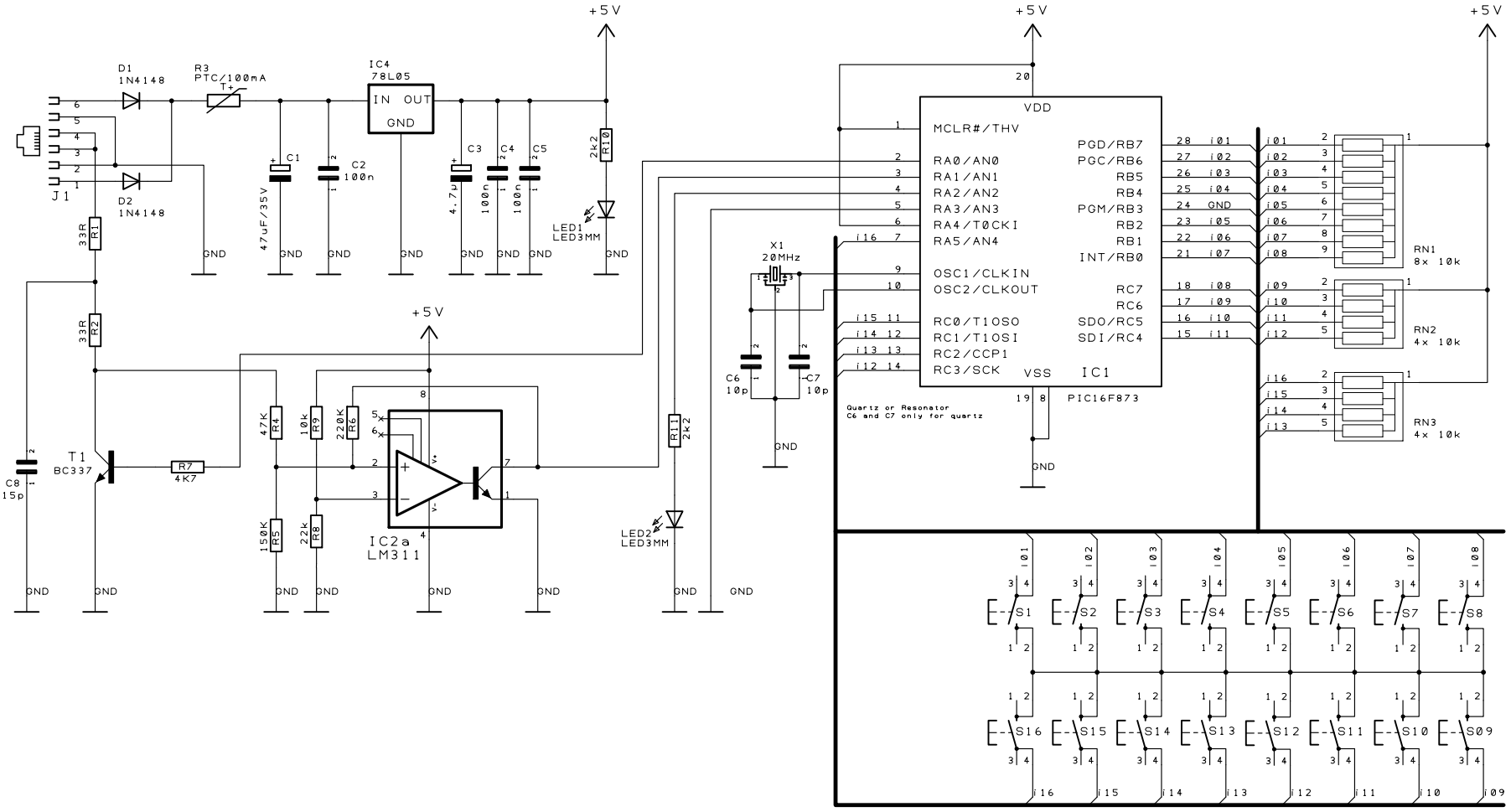

LocoIO, a project of
John Jabour - locbuffer.com

TITLE: LocoIO-Keypad

Document Number:
adapted by Sim&IT

REV: 1.2

Date: 24.04.19

Sheet: 1 / 1