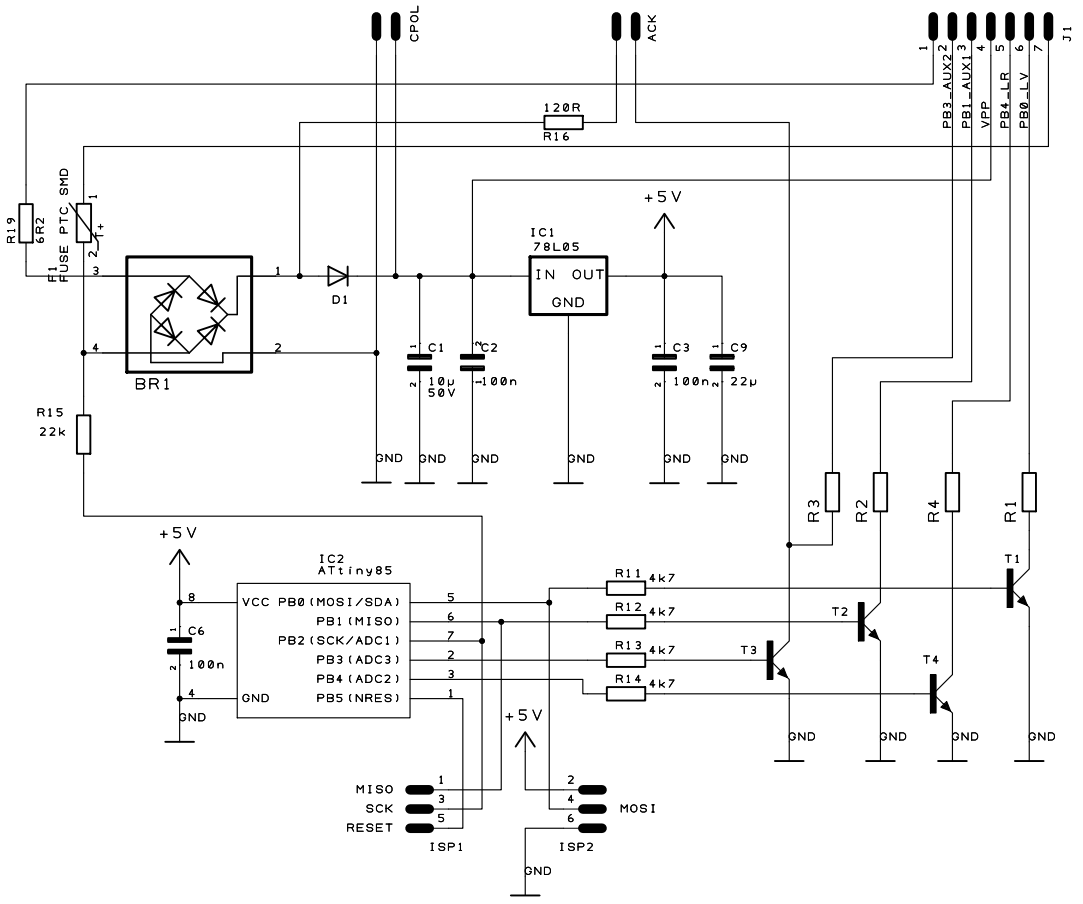

PROJECT:	DCC-Decoder ATtiny85
DRAWING TITLE:	Decoder-ATtiny85
DRAWN BY:	Sim&IT - Michael Hochmuth
REVISION:	1.0
SHEET:	1 OF 1
STATUS:	
DATE:	07.04.2026

Sim&IT